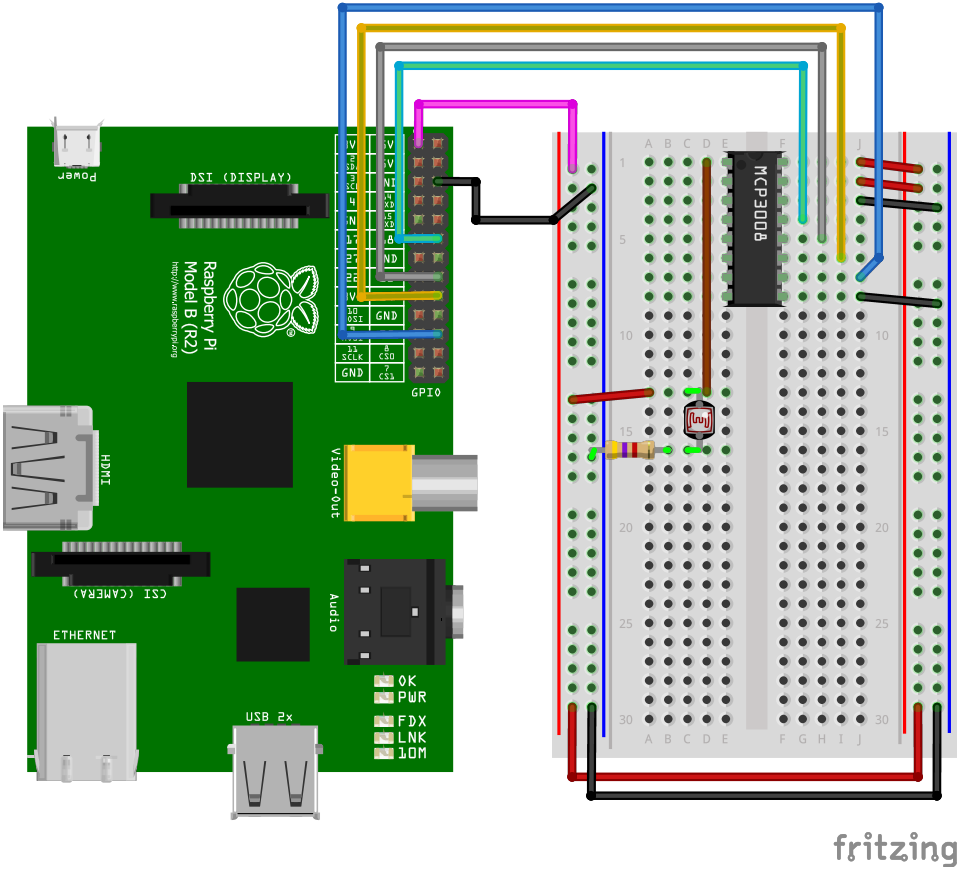
Power
DSI (DISPLAY)
Raspberry Pi
Model B (R2)
http://www.raspberrypi.org
GPIO
HDMI
Video-out
CSI (CAMERA)
Audio
ETHERNET
USB 2x
OK
PWR
FDX
LNK
10M
MCP3008
fritzing