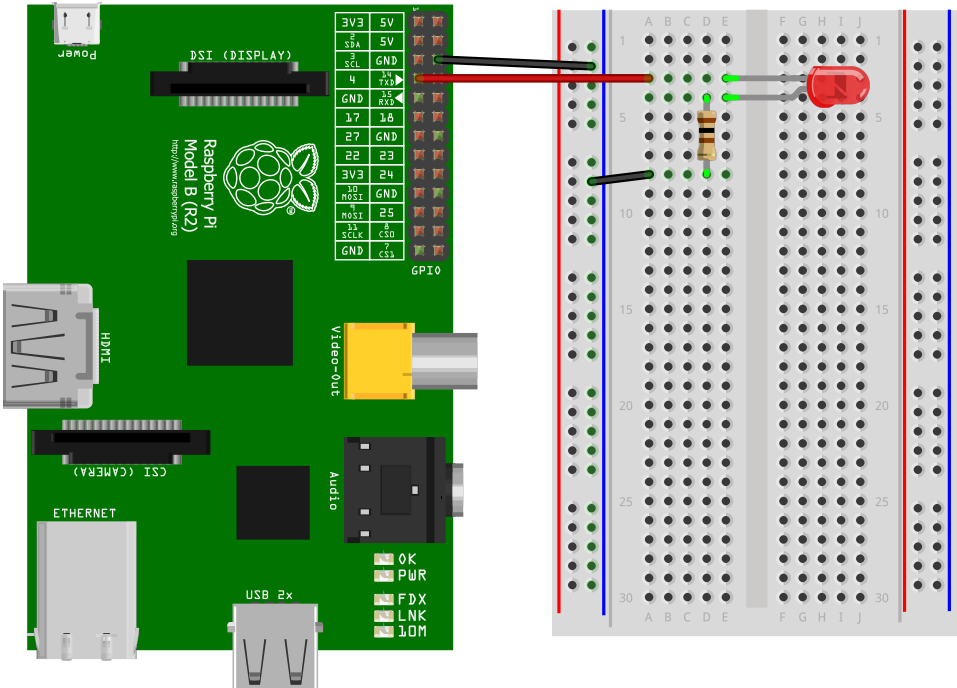
Power
DSI (DISPLAY)
Raspberry Pi
Model B (R2)
http://www.raspberrypi.org
3V3 1
5V 2
2 SDA
5V 4
3 SCL
GND 6
4
14 TXD
GND 8
15 RXD
17 10
27 GND
22 23
3V3 24
10 MOSI
GND 26
9 MOSI
25 28
11 SCLK
8 CSO
GND 30
7 CS1
GPIO
HDMI
Video-out
CSI (CAMERA)
Audio
ETHERNET
OK
PWR
FDX
LNK
10M
USB 2x
A B C D E
F G H I J
1
5
10
15
20
25
30
fritzing