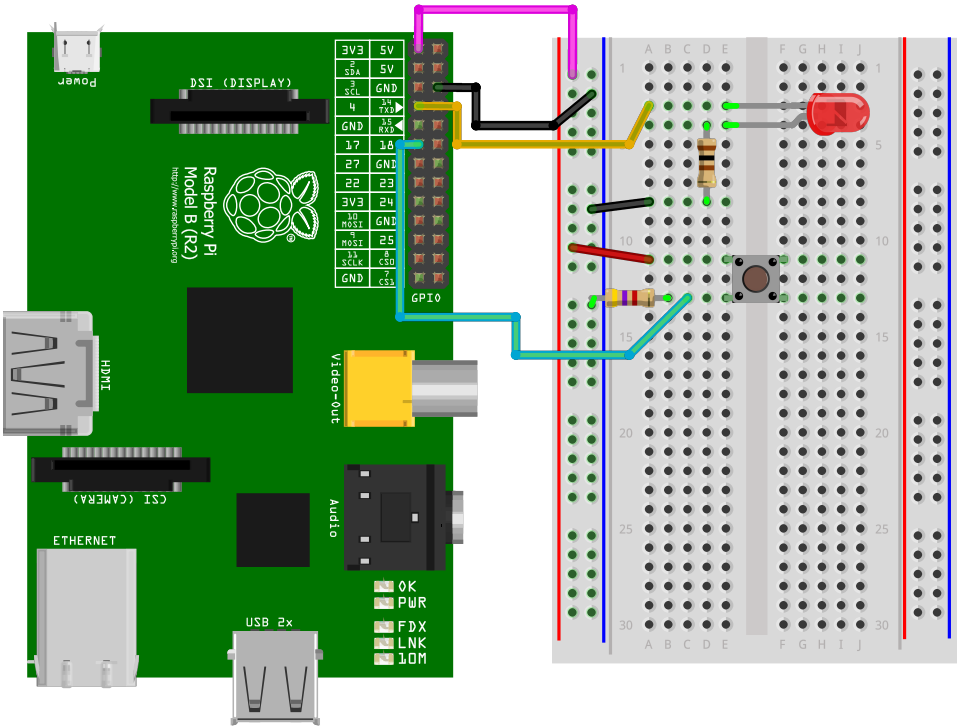
Power
DSI (DISPLAY)
Raspberry Pi
Model B (R2)
http://www.raspberrypi.org
3V3 5V
2 SDA 5V
3 SCL GND
4 14 TXD
GND 15 RXD
17 18
27 GND
22 23
3V3 24
10 MOSI GND
9 MOSI 25
11 SCLK 8 CSO
GND 7 CS1
GPIO
HDMI
Video-out
CSI (CAMERA)
Audio
ETHERNET
OK
PWR
FDX
LNK
10M
USB 2x
A B C D E F G H I J
1 5 10 15 20 25 30
fritzing