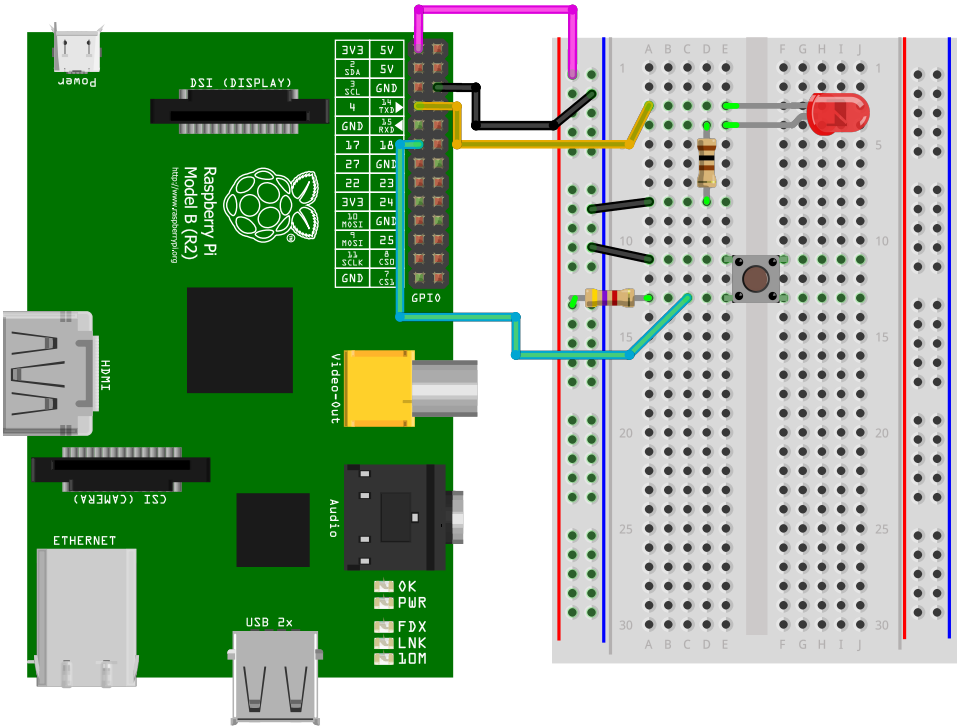
Power
DSI (DISPLAY)
Raspberry Pi
Model B (R2)
http://www.raspberrypi.org
3V3
5V
2 SDA
5V
3 SCL
GND
4
14 TXD
GND
15 RXD
17
18
27
GND
22
23
3V3
24
10 MOSI
GND
9 MOSI
25
11 SCLK
8 CSO
GND
7 CS1
GPIO
HDMI
Video-out
CSI (CAMERA)
Audio
ETHERNET
OK
PWR
FDX
LNK
10M
USB 2x
A B C D E
F G H I J
1
5
10
15
20
25
30
fritzing